AC902

1 FL OZ MPAK STANDARD TWIST LOCK 80 OR 130 MCL DOSAGE

NUMBER	DOSAGE	SPRAY
AC902A-000-1N	80 MCL	NARROW
AC902A-000-2G	80 MCL	WIDE
AC902B-000-1N	130 MCL	NARROW
AC902B-000-2G	130 MCL	WIDE

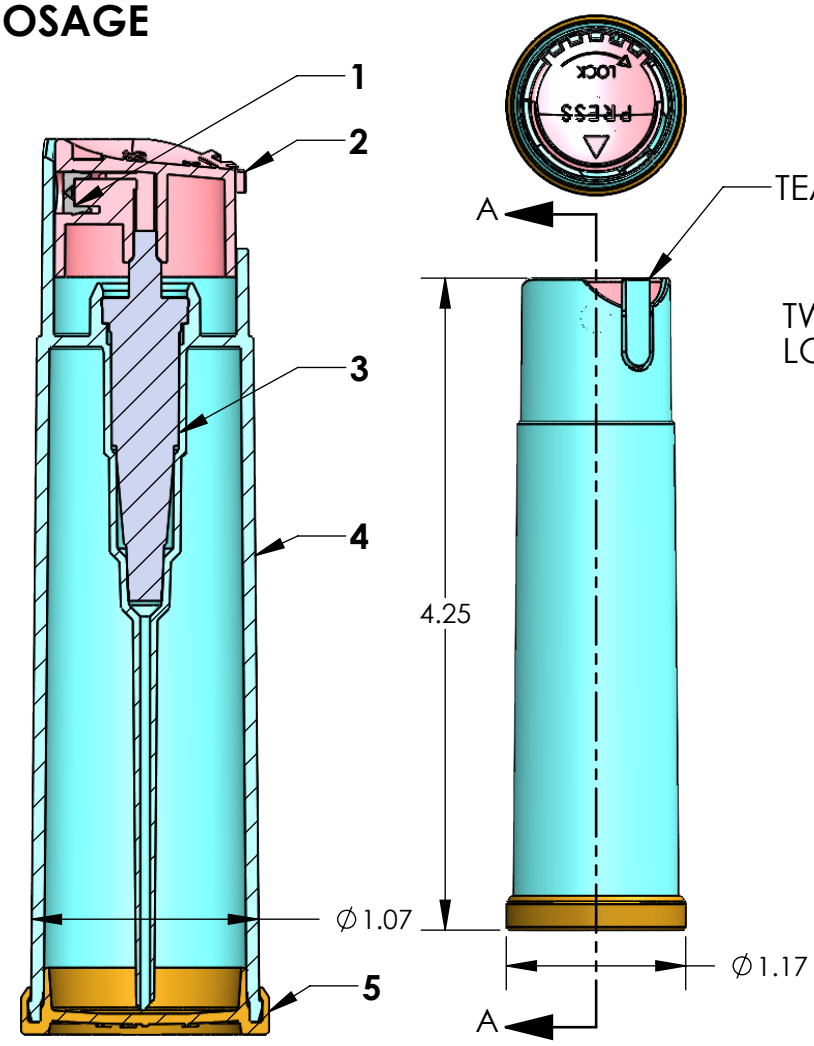

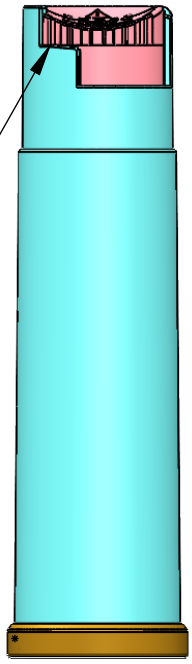

BACK VIEW

04/05/21 Rev. B Revise MA006 actuator to MA065 due to MA006 mold obselence

TABLE OF RAW MATERIAL USED

ITEM	COMPONENT	PART NUMBER	MATERIAL	
1	SPRAY INSERT	PE001	Acetal	
	SPRAY INSERT	PE002	Acetal	
2	ACTUATOR	MA005	HDPE	
	ACTUATOR	MA065	Acetal	
3	PUMP 32MSLP-80	2563-CD	SEE DRAWING	
	PUMP 32MSLP-130	2564-CD	SEE DRAWING	
4	BODY	08-MB002-02	POLYPROPYLENE	
5	CLOSURE	MC002A	POLYPROPYLENE	

PROPRIETARY AND CONFIDENTIAL
THE INFORMATION CONTAINED IN THIS DRAWING IS THE SOLE PROPERTY OF PACKAGING CONCEPTS ASSOC.,LLC. ANY REPRODUCTION IN PART OR AS A WHOLE WITHOUT THE WRITTEN PERMISSION OF PACKAGING CONCEPTS ASSOC.,LLC IS PROHIBITED.

NEXT ASSY | USED ON

APPLICATION

DIMENSIONS ARE IN INCHES
TOLERANCES:
FRACTIONAL ±
ANGULAR: MACH ± BEND ±
TWO PLACE DECIMAL ±
THREE PLACE DECIMAL ±

MATERIAL

FINISH

DO NOT SCALE DRAWING

	NAME	DATE
DRAWN	HWD	7/24/16
CHECKED		
ENG APPR.		
MFG APPR.		
Q.A.		

COMMENTS:

PACKAGING CONCEPTS ASSOC., LLC
230 Ella Grasso Avenue
Torrington, Connecticut 06790

MPAK
1 FL OZ
STANDARD TWIST LOCK
32MSLP PUMP

SIZE **A** | DWG. NO. AC902 | REV. B

SCALE:1:1 | WEIGHT: | SHEET 1 OF 1