ACV903

2 FL OZ MPAK STANDARD TWIST LOCK 70,100 OR 130 MCL DOSAGE

NUMBER	DOSAGE	SPRAY
ACV903A-000-1N	70 MCL	NARROW
ACV903A-000-2G	70 MCL	WIDE
ACV903B-000-1N	100 MCL	NARROW
ACV903B-000-2G	100 MCL	WIDE
ACV903C-000-1N	130 MCL	NARROW
ACV903C-000-2G	130 MCL	WIDE

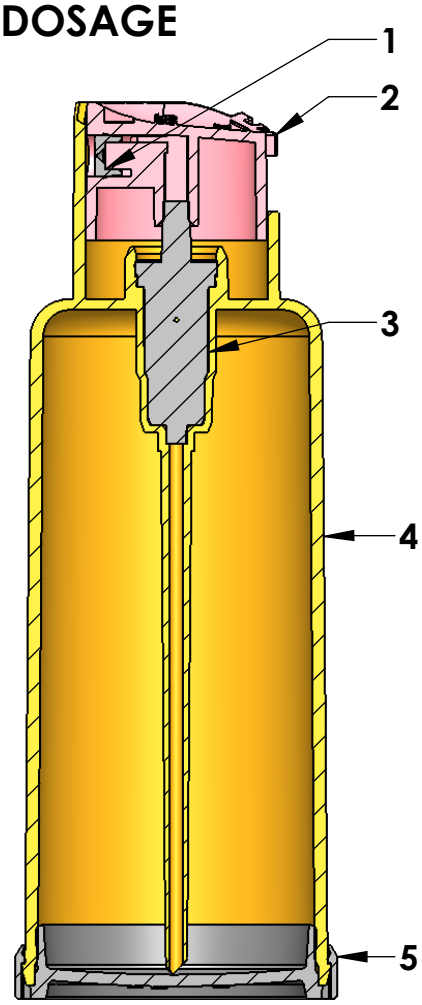

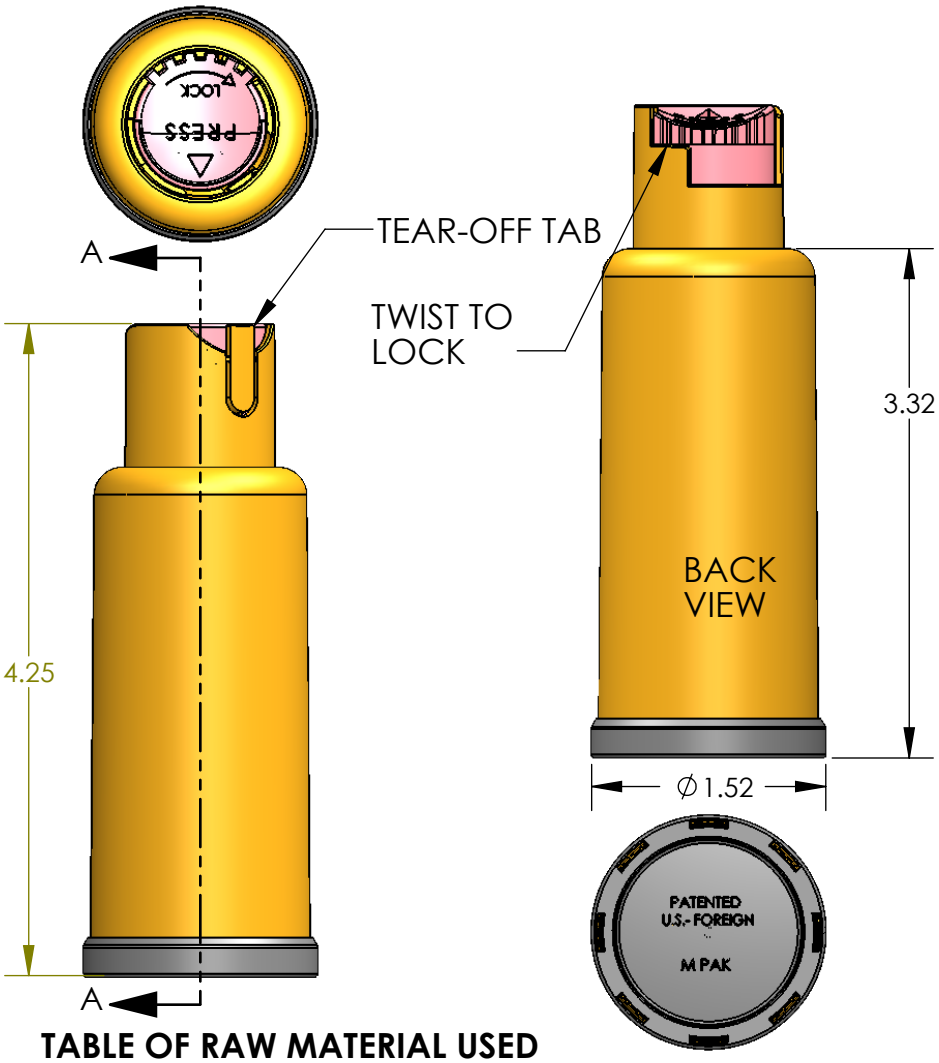

TABLE OF RAW MATERIAL USED

ITEM	COMPONENT	PART NUMBER	MATERIAL	
1	SPRAY INSERT	PE001	ACETAL	
	SPRAY INSERT	PE002	ACETAL	
2	ACTUATOR	MA043	HDPE	
	ACTUATOR	MA044A	HDPE	
	ACTUATOR	MA045A	HDPE	
3	PUMP VP4E-100	19711	SEE DRAWING	
	PUMP VP4E-100	19712	SEE DRAWING	
	PUMP VP4E-130	20546	SEE DRAWING	
4	BODY	CA	POLYPROPYLENE	
5	CLOSURE	06-MC003-01	POLYPROPYLENE	

PROPRIETARY AND CONFIDENTIAL
THE INFORMATION CONTAINED IN THIS DRAWING IS THE SOLE PROPERTY OF PACKAGING CONCEPTS ASSOC.,LLC. ANY REPRODUCTION IN PART OR AS A WHOLE WITHOUT THE WRITTEN PERMISSION OF PACKAGING CONCEPTS ASSOC.,LLC IS PROHIBITED.

NEXT ASSY | USED ON

APPLICATION

DIMENSIONS ARE IN INCHES
TOLERANCES:
FRACTIONAL ±
ANGULAR: MACH ± BEND ±
TWO PLACE DECIMAL ±
THREE PLACE DECIMAL ±

MATERIAL

FINISH

DO NOT SCALE DRAWING

	NAME	DATE
DRAWN	HWD	7/20/16
CHECKED		
ENG APPR.		
MFG APPR.		
Q.A.		

COMMENTS:

PACKAGING CONCEPTS ASSOC., LLC
230 Ella Grasso Avenue
Torrington, Connecticut 06790

MPAK
2 FL OZ
STANDARD TWIST LOCK
VP4E PUMP

SIZE **A** | DWG. NO. ACV903 | REV. A

SCALE:1:1 | WEIGHT: | SHEET 1 OF 1