DRG.No PLA0936A

THIRD ANGLE

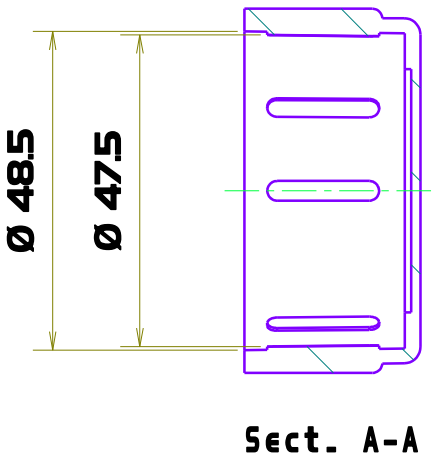

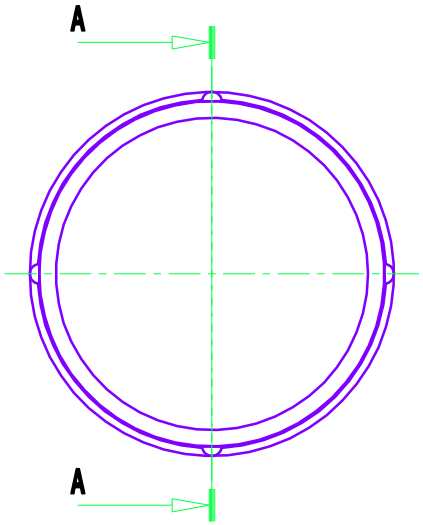

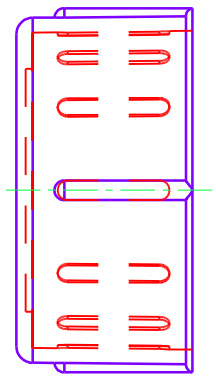

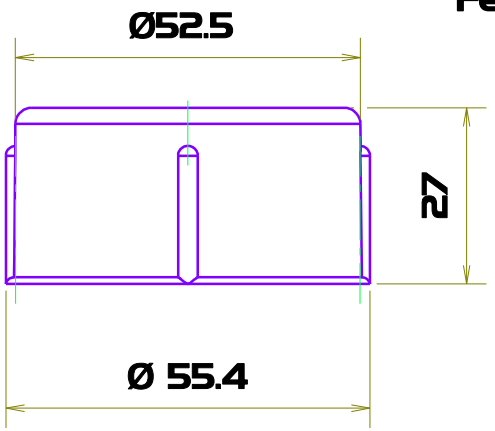

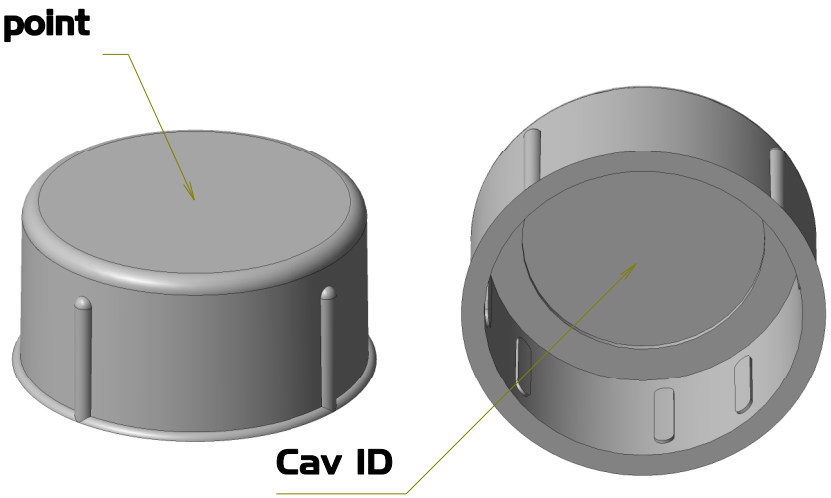

File location: CAD files on PlasmotecOI/ Original/ Plasmotec / PLA0936A - Scaffolding Cap

"This drawing represents our interpretation of your instructions and all sizes and tolerances should be carefully checked.We assume that the profile is an original design owned by you,and we shall, accordingly produce it in good faith. Should the profile infringe any patent, registered design or copyright owned by a third party, we shall assume that we are indemnified by you against all loss we may suffer arising from any claims by that third party.Your signature indicates acceptance of the drawing, and that our assumption is correct"

Drawn in accordance with BS308 Parts 1 & 2
All dimensions in millimeters
Tolerance unless stated to be the larger of:
whole numbers (0) +/- 0.5 or 0.5%
one decimal place (0.0) +/- 0.25 or 0.25%
two decimal places(0.00) +/- 0.12 or 0.12%

PLASMOTEC LTD							
TITLE	Scaffolding Cap		1	Original		08/02/08	
COL / Matl.	Polyethylene		ISS	REVISIONS		DATE	
FINISH	Std Machined	Drwn By Andy	Ch'd by	DATE 08/02/08	DRG.No	PLA0936A	